Vertical Multistage Centrifugal Pumps LEO®

APPLICATIONS

LVR(S) series, vertical multistage centrifugal pump, is suitable for transferring liquids of low viscosity, non-inflammable and non-explosive, not containing solid particles or fibers.

- Water supply: water supply & drainage for high-rise buildings, filtration and transfer at waterworks, pressure boosting in main pipe
- Industry: Washing and cleaning systems, boiler feeding, cooling water circulation, water treatment systems, auxiliary system, support equipment
- Water treatment: ultra-filtration systems, reverse-osmosis systems, distillation systems, separators, swimming pools
- Agricultural irrigation: sprinkler irrigation, drip-feed irrigation
- Food & beverage industry
- Fire-fighting system

FEATURES

- Compact, nice appearance, efficient, low noise, reliable seal, easy to use and maintain

OPERATING CONDITIONS

Low viscosity, non-inflammable and non-explosive liquids not containing solid particles or fibers. The liquids must not chemically attack the pump materials. When pumping liquids with a density or viscosity is higher than that of water, a motor with a higher output power rating shall be used.

- Liquid temperature: -15℃+120℃
- Flow ranges: 0.7-85m³/h
- pH: 3~9
- Max. ambient temperature: +40℃
- Max. operation pressure: 33bar
- Altitude: up to 1000m

MOTOR

- Totally enclosed & fan-cooled motor
- Protection class: IP 55
- Standard voltage: 50Hz 1×220V/3×380V

IDENTIFICATION CODES

LVS 45-10-2-B-F

- F: Pipeline port code (Omitted for DIN flange)
- B: AISI316 stainless steel material (Omitted for AISI304)
- 2: Small impeller stages
- 10: Impeller stage
- 45: Rated flow(m³/h)
- LVS: LVS,LVR Vertical multistage pump series

LVS: Stainless steel wetted parts
LVR: Cast iron base & pump cover

Identifications codes of flange structure
F: DIN flange ; A: Oval flange
K: Clamp connector ; G: Threaded connector

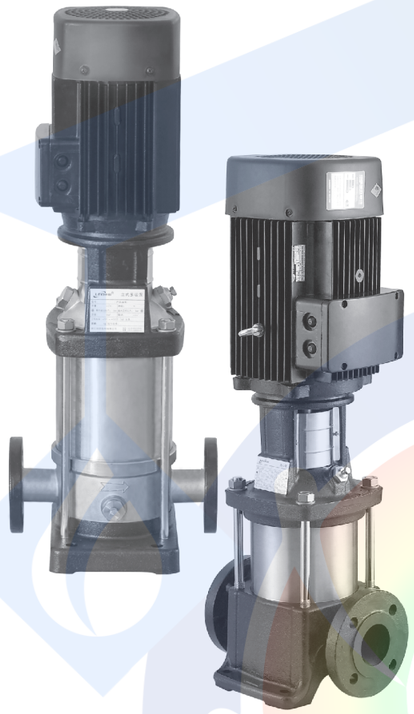

000003

AMBIENT TEMPERATURE

Max. ambient temperature: + 40℃. Ambient temperature above 40 or installation at altitude of more than 1000 meters above sea level require the use of an oversize motor. Because of low air density and poor cooling effects, the motor output power P_2 will be decreased. See the picture.

In such cases, it may be necessary to use a motor with a higher output power rating.

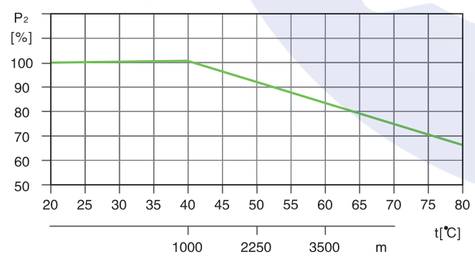

For example, when the pump is installed at altitude of more than 3500 meters above sea level, P_2 will be decreased to 88%. When the ambient temperature is 70℃, P_2 will be decreased to 78%.

MINIMUM INLET PRESSURE-NPSH

Calculation of the inlet pressure "H" is recommended in these situations:

- The liquid temperature is high.
- The flow is significantly higher than the rated flow.
- Water is drawn from depths.
- Water is drawn through long pipes.
- Inlet conditions are poor.

To avoid cavitation, make sure that there is a minimum pressure on the suction side of the pump. The maximum suction lift "H" in meters head can be calculated as follows:

H	$= P_b \times 10.2 - NPSH - H_f - H_v - H_s$
P_b	= Barometric pressure in bar. (Barometric pressure can be set to 1 bar). In closed systems, P_b indicates the system pressure in bar.
NPSH	= Net Positive Suction Head in meters head. (To be read from the NPSH curve at the highest flow the pump will be delivering.)
H_f	= Friction loss in suction pipe in meters head. (At the highest flow the pump will be delivering.)
H_v	= Vapor pressure in meters head. (To be read from the vapor pressure scale. "H_v" depends on the liquid temperature "tm")
H_s	= Safety margin=minimum 0.5 meters head.

If the "H" calculated is positive, the pump can operate at a suction lift of maximum "H" meters head.
If the "H" calculated is negative, an inlet pressure of minimum "H" meters head is required.

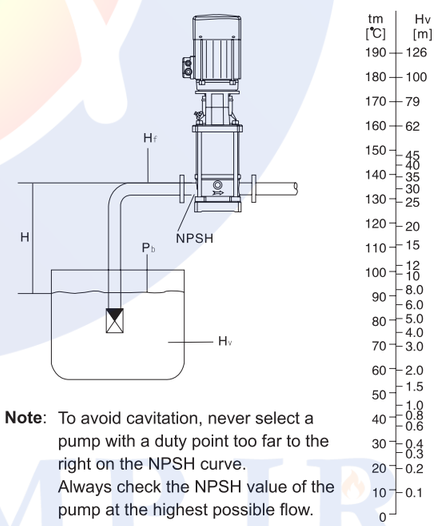

Note: To avoid cavitation, never select a pump with a duty point too far to the right on the NPSH curve. Always check the NPSH value of the pump at the highest possible flow.

MAXIMUM INLET PRESSURE

The following table shows the maximum permissible inlet pressure. However, the current inlet pressure + the pressure against a closed valve must always be lower than the Max. permissible operating pressure.
If the maximum permissible operating pressure is exceeded, the bearing in the motor may be damaged and the life of the shaft seal reduced.

Pump Type	Maximum Inlet Pressure [bar]
LVR1,LVS1	
1–2 — 1–36	10
LVR2,LVS2	
2–2	6
2–3 — 2–11	10
2–13 — 2–26	15
LVR3,LVS3	
3–2 — 3–29	10
3–31 — 3–26	15
LVR4,LVS4	
4–2	6
4–3 — 4–10	10
4–12 — 4–22	15
LVR5,LVS5	
5–2 — 5–16	10
5–18 — 5–29	15
LVR10,LVS10	
10–1 — 10–6	8
10–7 — 10–22	10
LVR15,LVS15	
15–1 — 15–3	8
15–4 — 15–17	10
LVR20,LVS20	
20–1 — 20–3	8
20–4 — 20–17	10
LVR32,LVS32	
32–1–1 — 32–4	4
32–5–2 — 32–10	10
32–11 — 32–14	15
LVR45,LVS45	
45–1–1 — 45–2	4
45–3–2 — 45–5	10
45–6–2 — 45–13–2	15
LVR64,LVS64	
64–1–1 — 64–2–2	4
64–2–1 — 64–4–2	10
64–4–1 — 64–8–1	15

Vertical Multistage Centrifugal Pumps

HOW TO READ THE CURVE CHARTS

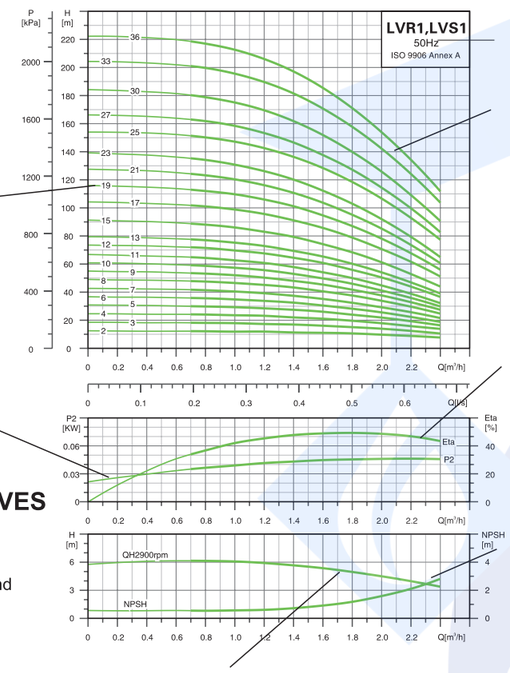

- Pump type, frequency and ISO standard.
- QH curve for the individual pump. The bold curves indicate the recommended duty range for best efficiency.
- Number of Stages
- The power curves indicate pump input per stage.
- The eta curve shows the efficiency of the pump. The eta curve is an average curve of all the pump types shown in the chart.
- The NPSH curve is an average curve for all the variants shown. When choosing the pump, add a safety margin of at least 0.5m.
- QH curve for each individual impeller. Curves for standard impellers are shown.

GUIDELINES TO PERFORMANCE CURVES

- Tolerances to ISO 9906, Annex A.
- Measurements have been made with airless water at a temperature of 20℃and kinematic viscosity of 1mm²/s.
- To avoid overheating of the motor, the pump should not be use against a high head for a long time.

MINIMUM FLOW RATE

Due to the risk of overheating, the pump should not be used at a flow below the minimum flow rate. The curve below shows the minimum flow rate as a percentage of the nominal flow rate in relation to the liquid temperature.

Air cooling apparatus

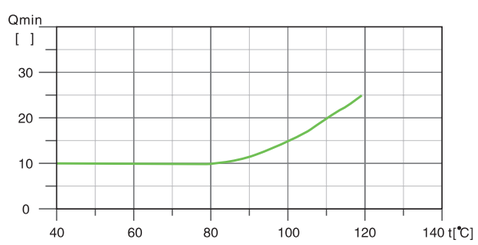

Note: The outlet valve must be opened when the pump is in operation.

TERMINAL BOX POSITIONS

(Note: set to position 1 before delivery)

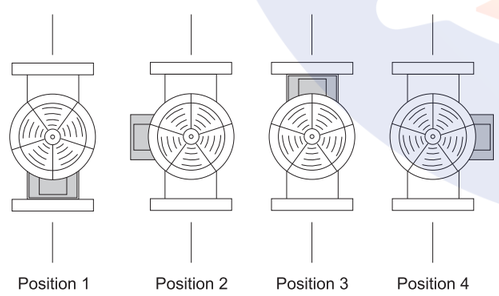

PRODUCT RANGE

DESCRIPTION \ MODEL	LVR(S)1	LVR(S)2	LVR(S)3	LVR(S)4	LVR(S)5	LVR(S)10	LVR(S)15	LVR(S)20	LVR(S)32	LVR(S)45	LVR(S)64
Rated flow [m³/h]	1	2	3	4	5	10	15	20	32	45	64
Flow range [m³/h]	0.7–2.4	1.0–3.5	1.2–4.5	1.5–8	2.5–8.5	5–13	8–23	10.5–29	15–40	22–58	30–85
Max. pressure [bar]	22	23	24	21	24	22	23	25	28	33	22
Motor power [kW]	0.37–2.2	0.37–3	0.37–3	0.37–4	0.37–4	0.37–7.5	1.1–15	1.1–18.5	1.5–30	3–45	4–45
Temperature Range [℃]	–20℃~+120℃ (Note: Both the Max. permissible pressure and liquid temperature range refer to the pump capacity.)										
Max. pump efficiency [%]	45	46	55	59	60	65	70	72	78	79	80
Pipe connection-LVR											
Oval flange	G1	G1	G1	G1 1/4	G1 1/4	–	–	–	–	–	–
DIN flange	–	–	–	–	–	DN 42	DN 50	DN 50	DN65	DN80	DN100
Flange structure	○	○	○	○	○	○	○	○	●	●	●
Pipe connection-LVS											
Oval flange	–	–	–	–	–	–	–	–	–	–	–
DIN flange	DN 32	DN 32	DN 32	DN 32	DN 32	DN 42	DN 50	DN 50	DN65	DN80	DN100
Clamp connector	ϕ42	ϕ42	ϕ42	ϕ42	ϕ42	–	–	–	–	–	–
Threaded connector	G1 1/4	G1 1/4	G1 1/4	G1 1/4	G1 1/4	–	–	–	–	–	–
Flange structure	●	●	●	●	●	●	●	●	●	●	●

Note: ○ It means stationary flange structure , ● It means dynamic flange structure

000003

SCOPE OF PERFORMANCE-LVR,LVS

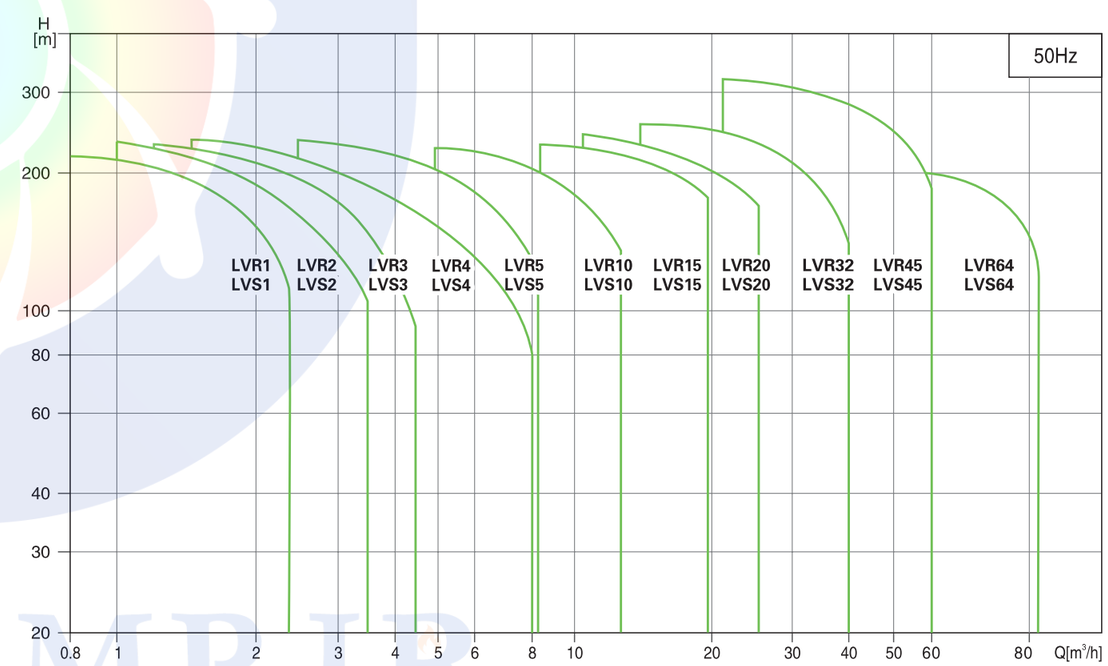

Vertical Multistage Centrifugal Pumps LEO®

CROSS SECTION

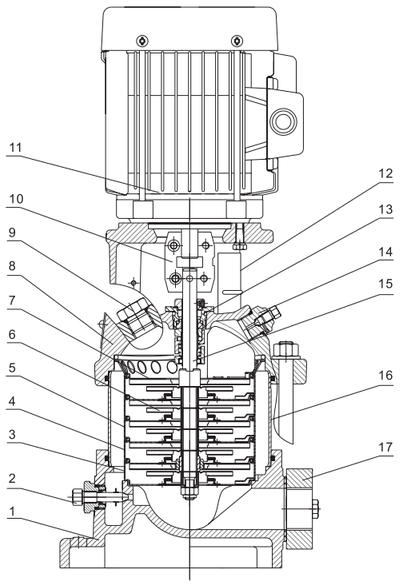

MODEL：LVR1(2,3,4,5)

	Part	Material
1	Base	HT200
2	Drainage plug assembly	AISI304
3	Primary diffuser	AISI304
4	Diffuser with bearing	AISI304
5	Medium diffuser	AISI304
6	Impeller	AISI304
7	Final diffuser	AISI304
8	Motor base	HT200
9	Filling plug	AISI304
10	Coupling	Iron based powder metallurgy
11	Motor	
12	Guarding plate	AISI304
13	Cartridge seal	
14	Vent plug assembly	AISI304
15	Pump shaft	AISI304
16	Pump barrel	AISI304
17	Oval flange	HT200

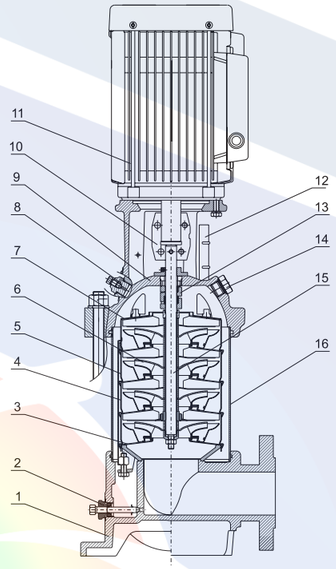

MODEL：LVR10(15,20)

	Part	Material
1	Base	HT200
2	Drainage plug assembly	AISI304
3	Primary diffuser	AISI304
4	Diffuser with bearing	AISI304
5	Medium diffuser	AISI304
6	Impeller	AISI304
7	Final diffuser	AISI304
8	Filling plug	AISI304
9	Motor base	HT200
10	Coupling	Iron based powder metallurgy
11	Motor	
12	Guarding plate	AISI304
13	Cartridge seal	
14	Vent plug assembly	AISI304
15	Pump shaft	AISI304
16	Pump barrel	AISI304

000003

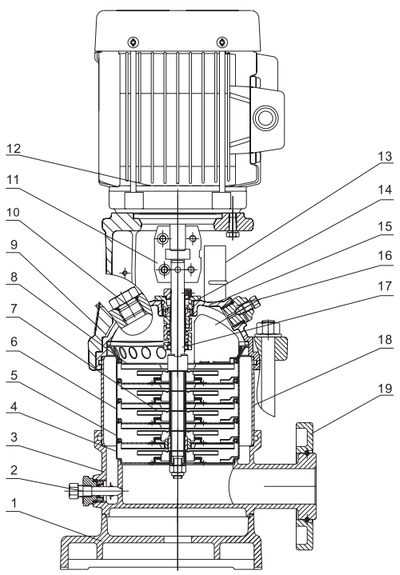

MODEL：LVS1(2,3,4,5)

	Part	Material	Optional Material
1	Base plate	HT200	
2	Drainage plug assembly	AISI304	AISI316
3	Chasis	ZG304	ZG316
4	Primary diffuser	AISI304	AISI316
5	Diffuser with bearing	AISI304	AISI316
6	Medium diffuser	AISI304	AISI316
7	Impeller	AISI304	AISI316
8	Final diffuser	AISI304	AISI316
9	Motor base	HT200	
10	Filling plug	AISI304	AISI316
11	Coupling	Iron based powder metallurgy	
12	Motor		
13	Guarding plate	AISI304	
14	Catridge seal		
15	Pump cover	ZG304	ZG316
16	Vent plug assembly	AISI304	AISI316
17	Pump shaft	AISI304	AISI316
18	Pump barrel	AISI304	AISI316
19	Flange	ZG35	

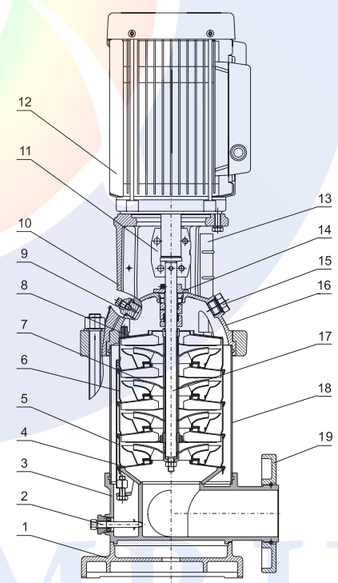

MODEL：LVS10(15,20)

	Part	Material	Optional Material
1	Base plate	HT200	
2	Drainage plug assembly	AISI304	AISI316
3	Chasis	ZG304	ZG316
4	Primary diffuser	AISI304	AISI316
5	Diffuser with bearing	AISI304	AISI316
6	Medium diffuser	AISI304	AISI316
7	Impeller	AISI304	AISI316
8	Final diffuser	AISI304	AISI316
9	Filling plug	AISI304	AISI316
10	Motor base	HT200	
11	Coupling	Iron based powder metallurgy	
12	Motor		
13	Guarding plate	AISI304	
14	Catridge seal		
15	Vent plug assembly	AISI304	AISI316
16	Pump cover	ZG304	AISI316
17	Pump shaft	AISI304	AISI316
18	Pump barrel	AISI304	AISI316
19	Flange	ZG35	

Vertical Multistage Centrifugal Pumps LEO®

HYDRAULIC PERFORMANCE CURVES

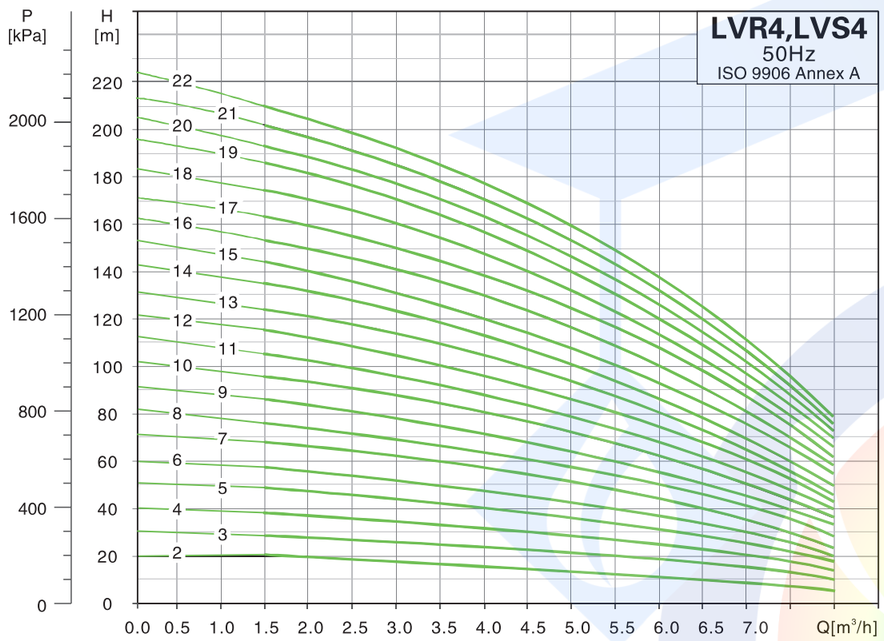

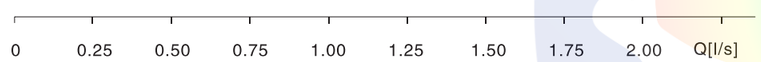

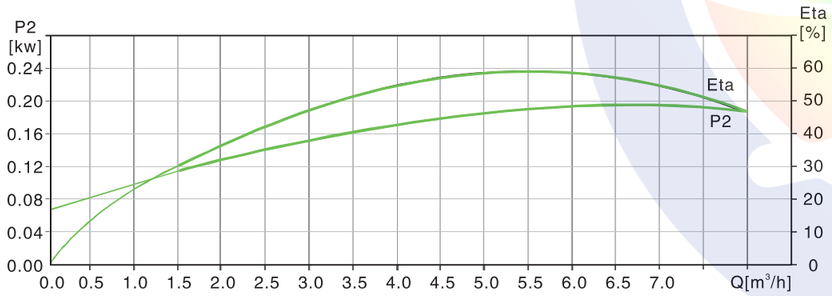

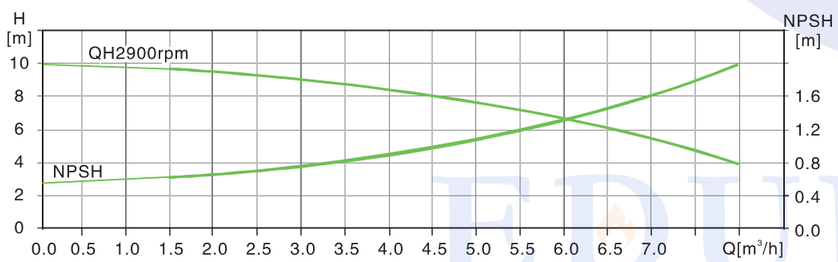

DIMENSION DRAWING

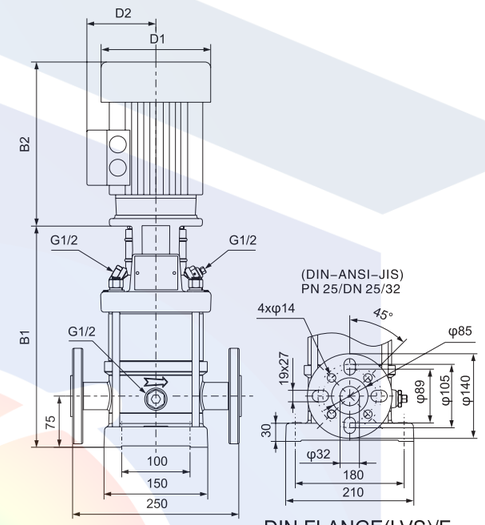

DIN FLANGE(LVS)/F

MODEL	OVAL FLANGE(LVR)		DIN FLANGE(LVS)		D1	D2
	B1	B1+B2	B1	B1+B2		
4–2	238	458	263	483	140	110
4–3	265	485	290	510	140	110
4–4	297	547	322	572	160	125
4–5	324	574	349	599	160	125
4–6	351	601	376	626	160	125
4–7	395	685	420	710	180	125
4–8	422	712	447	737	180	125
4–9	449	739	474	764	180	125
4–10	476	766	501	791	180	125
4–11	503	793	528	818	180	125
4–12	530	820	555	845	180	125
4–13	565	895	590	920	190	140
4–14	592	922	617	947	190	140
4–15	619	949	644	974	190	140
4–16	646	976	671	1001	190	140
4–17	673	1003	698	1028	220	150
4–18	700	1030	725	1055	220	150
4–19	727	1057	752	1082	220	150
4–20	754	1084	779	1109	220	150
4–21	781	1111	806	1136	220	150
4–22	808	1138	833	1163	220	150

Note: B1 and B1+B2 of clamp connector and threaded connector are in compliance with that of DIN flange.

000003

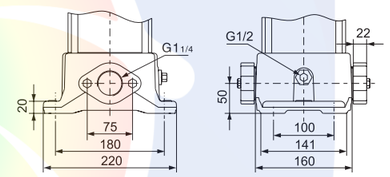

OVAL FLANGE(LVR)/A

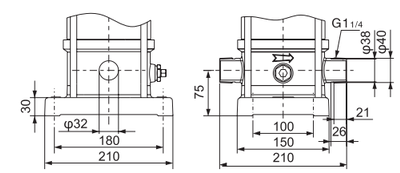

THREADED CONNECTOR (LVS)/G

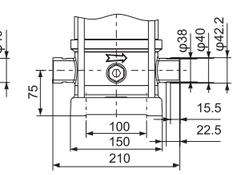

CLAMP CONNECTOR (LVS)/K

MODEL	POWER[kW]	Q[m³/h]	1.5	2.0	3.0	4.0	5.0	6.0	7.0	8.0
4–2	0.37		19	18	17	15	13	10	8	6
4–3	0.55		28	27	26	24	20	18	14	10
4–4	0.75		38	36	34	32	27	24	18	13
4–5	1.1		47	45	43	40	34	31	23	17
4–6	1.1		56	54	52	48	41	37	28	20
4–7	1.5		66	63	61	56	48	43	34	24
4–8	1.5		74	72	70	64	55	50	38	27
4–9	2.2		86	81	78	72	63	56	44	32
4–10	2.2		96	90	87	81	71	62	50	34
4–11	2.2		105	99	95	88	78	68	53	39
4–12	2.2	H(m)	114	108	104	95	85	75	57	41
4–13	3.0		123	117	113	103	93	82	63	45
4–14	3.0		136	126	122	112	101	89	69	48
4–15	3.0		142	135	131	120	108	95	73	52
4–16	3.0		152	144	140	129	115	101	78	55
4–17	4.0		163	153	149	137	122	108	83	62
4–18	4.0		175	162	158	145	129	115	89	65
4–19	4.0		183	171	168	153	137	122	95	67
4–20	4.0		192	180	176	161	144	127	99	72
4–21	4.0		203	210	184	169	152	132	103	75
4–22	4.0		211	200	192	178	160	138	108	79

EDUPUMP
WWW.EDUPUMP.IR

اولین و بزرگترین

سایت تخصصی سیستم‌های پمپاژ
با امکان محاسبه آنلاین و انتخاب پمپ

اولین سایت مرجع انتخاب آنلاین پمپ

در حوزه‌های :

ایمنی و آتش‌نشانی
آب و فاضلاب
صنایع غذایی
استخر
صنعت
معدن

تولید بوسترپمپ آتش‌نشانی

درکلاس‌های S1 - S2 - S3
مورد تایید سازمان آتش‌نشانی تهران

تولید بوسترپمپ آبرسانی دور متغیر

بدون محدودیت برند

مشاوره - طراحی - اجراء

تاسیسات مکانیکی (موتورخانه - استخر)
تهویه و تخلیه دود
سیستم‌های پمپاژ
ایمنی معماری
اعلام حریق
اطفاء حریق

آمـــــوزش

تهویه و تخلیه دود
سیستم‌های پمپاژ
ایمنی معماری
اطفاء حریق
اعلام حریق

سرمایش و گرمایش موتورخانه
نرم‌افزار فنی و مهندسی
استخر، سونا و جکوزی
سیستم‌های پمپاژ

تهـــران، سعـدی شمـالـی، خیابان مـرادی نور، پلاک ۳۱
تلفن: ۰۲۱-۷۷۶۸۶۹۶۶ فکس: ۰۲۱-۷۷۶۷۸۶۵۹
EDUPUMP.IR WWW.EDUPUMP.IR