KVC - KVCX

INTEGRAL SHAFT MULTISTAGE VERTICAL CENTRIFUGAL ELECTRIC PUMPS

TECHNICAL DATA

Operating range:
from 50 to 200 l/min with head up to 113 m.
Pumped liquid: clean, free of solids and abrasives, non-viscous, non-aggressive, non-crystallised and chemically neutral, with properties similar to water.

Pumped liquid temperature range: from 0 °C to +35 °C for domestic use (EN 60335-2-41 safety standards).
From 0°C to +40°C for other uses.
Maximum ambient temperature: +40 °C.
Maximum operating pressure: 12 bar (1200 kPa).
Protection class: IP 55
Insulation class: F
Standard voltage: single-phase 220-240 V / 50 Hz
three-phase 230-400 V / 50 Hz
IE2 ≥ 0,75 kW
Installation: fixed, vertical or horizontal position, provided that the motor is always above the pump.
Special executions on requests: alternative voltages and frequencies.

APPLICATIONS

Vertical multistage centrifugal pump suitable for small to medium user water systems. Suitable for pressurization units, filling of pressure vessels, sprinkler and watering systems, fire-fighting and washing systems, channelling of condensate and cooling water. Innovative and robust design.

CONSTRUCTION FEATURES OF THE PUMP

KVC: Technopolymer delivery and suction bodies, and in-line suction and delivery ports with threaded metal insert.
KVCX: technopolymer suction body with threaded metal insert; stainless steel threaded delivery port on pump liner.
Impellers, diffuser bodies and diffusers in technopolymer, fully rust-proof. AISI 304 stainless steel pump liner, adjustment rings and seal disc. Carbon/ceramic mechanical seal, fitted on the AISI 303 stainless-steel drive shaft extension.

CONSTRUCTION FEATURES OF THE MOTOR

Closed asynchronous type, external ventilation cooling. Rotor running on permanently lubricated ball bearings, oversized to ensure low noise and durability. Standard built-in thermo-amperometric protection. Capacitor permanently fitted on single phase versions.
Overload protection to be provided by the user for the three-phase version. Construction according to CEI 2-3 / CEI 61-69 (EN 60335-2-41).

MATERIALS

No.	PARTS*	MATERIALS
1	PUMP BODY	TECHNOPOLYMER A
4	IMPELLER	TECHNOPOLYMER B
6	DIFFUSER	TECHNOPOLYMER B
7	SHAFT WITH ROTOR	AISI 303 STAINLESS STEEL X10 CrNi S 1089 UNI 6900/71
16	MECHANICAL SEAL	SILICON CARBIDE/SILICON
28	OR RING	EPDM RUBBER
36	SEAL HOLDING DISC	AISI 304 STAINLESS STEEL X5 CrNi 1810 UNI 6900/71
57a	INTERMEDIATE STAGE	TECHNOPOLYMER B
69	LINER	AISI 304 STAINLESS STEEL X5 CrNi 1810 UNI 6900/71
98	DIFFUSER BODY	TECHNOPOLYMER B
271	CENTERING BUSHING	BRONZE B14
304	CONVEYOR	TECHNOPOLYMER B
8	DNM (standard for KVCX only)	

* In contact with the liquid.

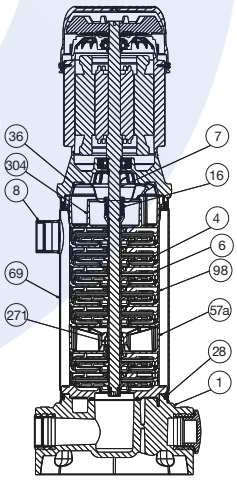

KVCX SUCTION AND DELIVERY PORT ORIENTATION

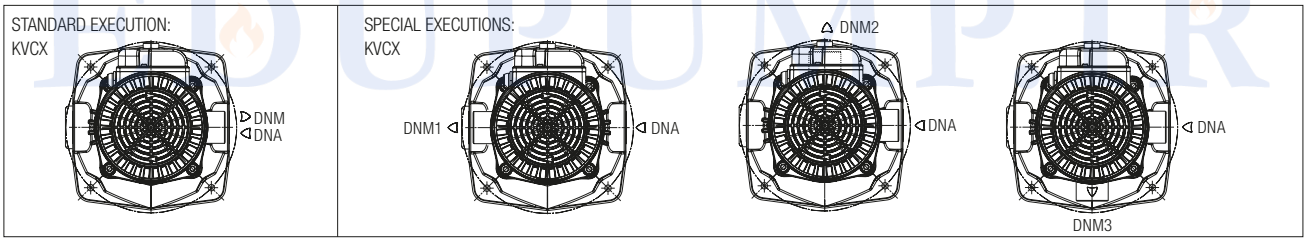

KVC - KVCX RANGE

INTEGRAL SHAFT MULTISTAGE VERTICAL CENTRIFUGAL ELECTRIC PUMPS

PERFORMANCE RANGE

The performance curves are based on kinematic viscosity values = 1 mm^2/s and density equal to 1000 kg/m^3. Curve tolerance according to ISO 9906.

GRAPHIC SELECTION TABLE

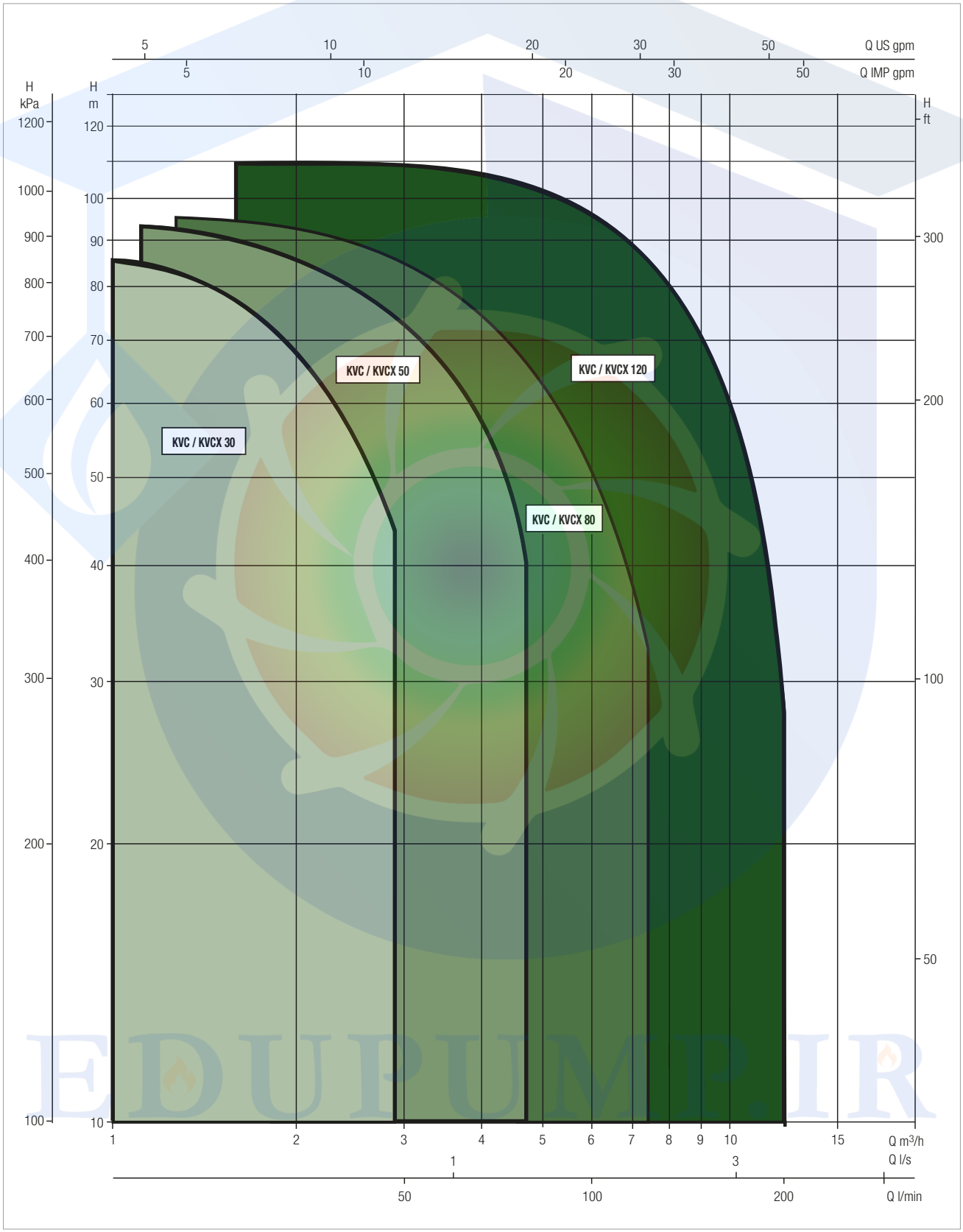

KVC - KVCX

INTEGRAL SHAFT MULTISTAGE VERTICAL CENTRIFUGAL ELECTRIC PUMPS

SELECTION TABLE - KVC / KVCX 30

MODEL		Q=m³/h	0	0.6	1.2	1.8	2.4	3	3.3
SINGLE-PHASE	THREE-PHASE	Q=l/min	0	10	20	30	40	50	55
KVC/KVCX 15/30 M	KVC/KVCX 15/30 T	H (m)	22.4	21.2	19.2	16.7	13.8	9.9	7.6
KVC/KVCX 25/30 M	KVC/KVCX 25/30 T		33.9	32.1	29.1	25.3	20.9	15.0	11.6
KVC/KVCX 35/30 M	KVC/KVCX 35/30 T		45.6	43.2	39.1	34.1	28.2	20.2	15.6
KVC/KVCX 45/30 M	KVC/KVCX 45/30 T		56.6	53.5	48.4	42.0	34.6	24.5	19.0
KVC/KVCX 50/30 M	KVC/KVCX 50/30 T		69.8	66.2	59.9	52.2	43.1	30.9	23.9
KVC/KVCX 60/30 M	KVC/KVCX 60/30 T		82.0	77.0	70.0	61.0	49.5	35.5	27.5
KVC/KVCX 70/30 M	KVC/KVCX 70/30 T		95.0	90.0	81.5	71.0	58.7	42.0	32.5

SELECTION TABLE - KVC / KVCX 50

MODEL		Q=m³/h	0	0.6	1.2	1.8	2.4	3	3.3	3.9	4.8
SINGLE-PHASE	THREE-PHASE	Q=l/min	0	10	20	30	40	50	55	65	80
KVC/KVCX 20/50 M	KVC/KVCX 20/50 T	H (m)	27.4	26.9	26.0	24.9	23.1	21.1	19.8	16.9	11.4
KVC/KVCX 30/50 M	KVC/KVCX 30/50 T		41.1	40.3	39.0	37.3	34.7	31.6	29.7	25.3	17.1
KVC/KVCX 40/50 M	KVC/KVCX 40/50 T		54.9	53.7	52.0	49.7	46.3	42.1	39.6	33.7	22.9
KVC/KVCX 55/50 M	KVC/KVCX 55/50 T		68.6	67.1	65.0	62.1	57.9	52.7	49.5	42.1	28.6
KVC/KVCX 65/50 M	KVC/KVCX 65/50 T		82.3	80.6	78.0	74.6	69.4	63.2	59.4	50.6	34.3
KVC/KVCX 75/50 M	KVC/KVCX 75/50 T		96.0	94.0	91.0	87.0	81.0	73.8	69.3	59.0	40.0

SELECTION TABLE - KVC / KVCX 80

MODEL		Q=m³/h	0	0.6	1.2	1.8	2.4	3	3.3	3.9	4.8	5.4	6	7.2
SINGLE-PHASE	THREE-PHASE	Q=l/min	0	10	20	30	40	50	55	65	80	90	100	120
KVC/KVCX 15/80 M	KVC/KVCX 15/80 T	H (m)	22.8	22.4	21.7	21.1	20.3	19.1	18.3	16.8	14.0	11.7	9.5	4.5
KVC/KVCX 20/80 M	KVC/KVCX 20/80 T		34.6	34.0	33.0	32.1	30.9	29.2	28.0	25.8	21.7	18.3	14.9	7.5
KVC/KVCX 30/80 M	KVC/KVCX 30/80 T		46.6	45.8	44.6	43.4	41.8	39.5	38.0	35.2	29.8	25.5	21.0	11.0
KVC/KVCX 40/80 M	KVC/KVCX 40/80 T		58.8	57.9	56.5	55.0	53.1	50.3	48.5	45.0	38.4	33.1	27.6	15.1
KVC/KVCX 45/80 M	KVC/KVCX 45/80 T		71.3	70.2	68.7	66.9	64.7	61.4	59.4	55.3	47.5	41.4	34.9	19.9
KVC/KVCX 55/80 M	KVC/KVCX 55/80 T		84.0	82.8	81.2	79.2	76.6	72.9	70.7	66.0	57.1	50.3	42.8	25.5
–	KVC/KVCX 65/80 T		97.0	95.7	94.0	91.8	88.9	84.7	82.5	77.2	67.3	59.9	51.5	32.0

SELECTION TABLE - KVC / KVCX 120

MODEL		Q=m³/h	0	0.6	1.2	1.8	2.4	3	3.3	3.9	4.8	5.4	6	7.2	8.4	9.6	10.8	12
SINGLE-PHASE	THREE-PHASE	Q=l/min	0	10	20	30	40	50	55	65	80	90	100	120	140	160	180	200
KVC/KVCX 25/120 M	KVC/KVCX 25/120 T	H (m)	30.4	30.3	30.2	30.0	29.9	29.6	29.3	28.7	27.7	26.9	25.9	23.2	19.9	16.4	12.0	7.0
KVC/KVCX 35/120 M	KVC/KVCX 35/120 T		46.2	46.1	45.7	45.3	44.8	44.0	43.7	42.7	40.9	39.3	37.4	33.7	29.4	24.2	18.0	11.0
KVC/KVCX 45/120 M	KVC/KVCX 45/120 T		62.4	62.0	61.4	60.8	60.1	59.1	58.6	57.5	55.3	53.4	51.4	46.2	40.6	34.0	26.3	17.0
–	KVC/KVCX 60/120 T		78.0	77.5	76.7	75.9	75.1	73.9	73.3	71.5	68.3	65.9	63.2	58.0	51.0	43.4	35.0	24.5
–	KVC/KVCX 70/120 T		95.0	94.3	93.4	92.5	91.4	89.8	88.9	86.8	83.2	80.5	77.9	71.7	63.9	54.7	44.0	31.0
–	KVC/KVCX 85/120 T		112.7	111.6	110.3	109.0	107.6	105.7	104.5	101.9	97.5	94.1	89.9	81.6	72.1	61.2	48.9	34.0

KVC / KVCX 30 - INTEGRAL SHAFT MULTISTAGE VERTICAL CENTRIFUGAL ELECTRIC PUMPS FOR CIVIL AND INDUSTRIAL PRESSURISATION SYSTEMS, PRESSURE UNITS

Pumped liquid temperature range: from 0 °C to +35 °C for domestic use - from 0 °C to +40 °C for the other uses

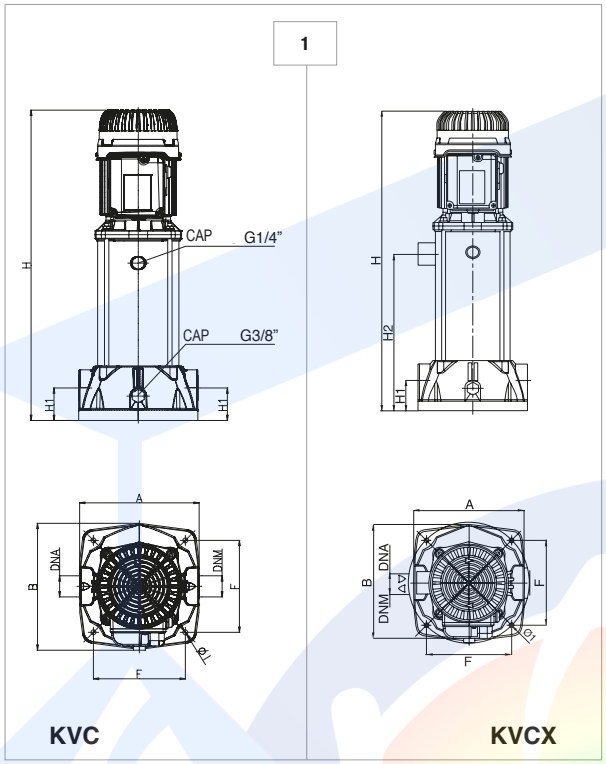

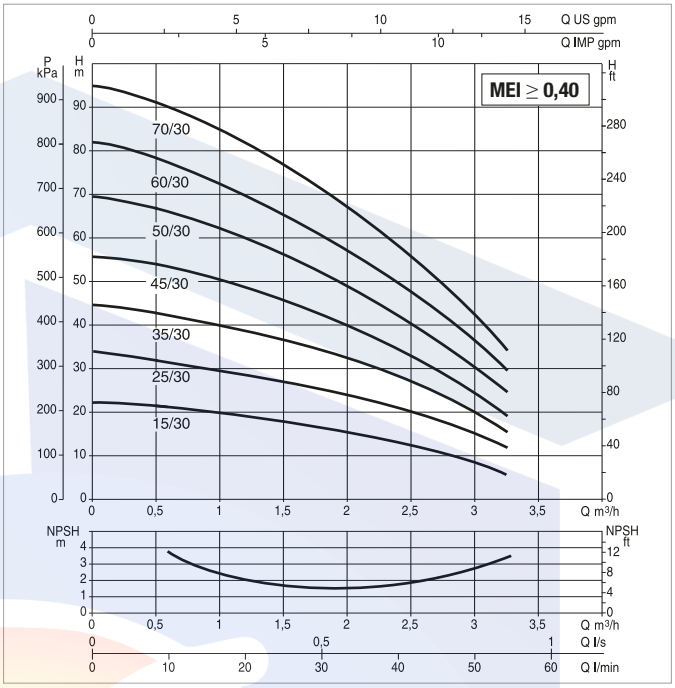

See hydraulic efficiency details on page 291.

The performance curves are based on kinematic viscosity values = 1 mm²/s and density equal to 1000 kg/m³. Curve tolerance according to ISO 9906.

MODEL	ELECTRICAL DATA										
	NO. OF IMPELLERS	POWER INPUT 50 Hz	P1 MAX kW	P2 NOMINAL		In A	MOTOR TYPE	I st. A	1/min.	CAPACITOR	
				kW	HP					µF	Vc
KVC-KVCX 15/30 M	2	1x220-240 V ~	0.36	0.25	0.33	1.6	–	13.7	2800	14	450
KVC-KVCX 15/30 T		3x230-400 V ~	0.45	0.25	0.33	1.4-0.8	–	15.9-9.2	2800	–	–
KVC-KVCX 25/30 M	3	1x220-240 V ~	0.52	0.37	0.5	2.4	–	13.7	2800	14	450
KVC-KVCX 25/30 T		3x230-400 V ~	0.54	0.37	0.5	1.7-1.0	–	15.9-9.2	2800	–	–
KVC-KVCX 35/30 M	4	1x220-240 V ~	0.7	0.45	0.6	3.2	–	13.7	2800	14	450
KVC-KVCX 35/30 T		3x230-400 V ~	0.64	0.45	0.6	2.1-1.2	–	15.9-9.2	2800	–	–
KVC-KVCX 45/30 M	5	1x220-240 V ~	0.9	0.55	0.75	4	–	13.7	2800	14	450
KVC-KVCX 45/30 T		3x230-400 V ~	0.75	0.55	0.75	2.4-1.4	–	15.9-9.2	2800	–	–
KVC-KVCX 50/30 M	6	1x220-240 V ~	1.1	0.75	1	4.9	–	19.5	2800	16	450
KVC-KVCX 50/30 T		3x230-400 V ~	0.97	0.75	1	3.8-2.2	IE2	16	2800	–	–
KVC-KVCX 60/30 M	7	1x220-240 V ~	1.2	0.8	1.1	5.6	–	28	2800	20	450
KVC-KVCX 60/30 T		3x230-400 V ~	1.2	0.8	1.1	3.8-2.2	IE2	21.4-12.4	2800	–	–
KVC-KVCX 70/30 M	8	1x220-240 V ~	1.4	1	1.36	6.5	–	30	2800	25	450
KVC-KVCX 70/30 T		3x230-400 V ~	1.4	1	1.36	4.4-2.6	IE2	22.1-12.8	2800	–	–

MODEL	EXTERNAL DESIGN	A	B	F	H	H1	H2	Ø I	DNA	DNM	PACKING DIMENSIONS			VOLUME (m³)	WEIGHT kg	
											L/A	L/B	H		single-phase	three-phase
KVC 15/30	1	221	235	170	450	60	–	9	G 1" 1/4	G 1" 1/4	300	360	600	0.065	14	14
KVC 25/30	1	221	235	170	478	60	–	9	G 1" 1/4	G 1" 1/4	300	360	600	0.065	14.4	14.4
KVC 35/30	1	221	235	170	505	60	–	9	G 1" 1/4	G 1" 1/4	300	360	600	0.071	14	14
KVC 45/30	1	221	235	170	533	60	–	9	G 1" 1/4	G 1" 1/4	300	360	600	0.071	14.4	14.4
KVC 50/30	1	221	235	170	598	60	–	9	G 1" 1/4	G 1" 1/4	300	360	600	0.079	16.2	16.2
KVC 60/30	1	221	235	170	625	60	–	9	G 1" 1/4	G 1" 1/4	300	360	600	0.079	17.2	17.2
KVC 70/30	1	221	235	170	653	60	–	9	G 1" 1/4	G 1" 1/4	300	360	600	0.084	18.4	18.4
KVCX 15/30	1	221	235	170	450	60	184	9	G 1" 1/4	G 1" 1/4	300	360	600	0.065	14	14
KVCX 25/30	1	221	235	170	478	60	184	9	G 1" 1/4	G 1" 1/4	300	360	600	0.065	14.4	14.4
KVCX 35/30	1	221	235	170	505	60	239	9	G 1" 1/4	G 1" 1/4	300	360	600	0.071	14	14
KVCX 45/30	1	221	235	170	533	60	239	9	G 1" 1/4	G 1" 1/4	300	360	600	0.071	14.4	14.4
KVCX 50/30	1	221	235	170	598	60	332	9	G 1" 1/4	G 1" 1/4	300	360	600	0.079	16.2	16.2
KVCX 60/30	1	221	235	170	625	60	332	9	G 1" 1/4	G 1" 1/4	300	360	600	0.079	17.2	17.2
KVCX 70/30	1	221	235	170	653	60	359	9	G 1" 1/4	G 1" 1/4	300	360	600	0.084	18.4	18.4

KVC / KVCX 50 - INTEGRAL SHAFT MULTISTAGE VERTICAL CENTRIFUGAL ELECTRIC PUMPS FOR CIVIL AND INDUSTRIAL PRESSURISATION SYSTEMS, PRESSURE UNITS

Pumped liquid temperature range: from 0 °C to +35 °C for domestic use - from 0 °C to +40 °C for the other uses

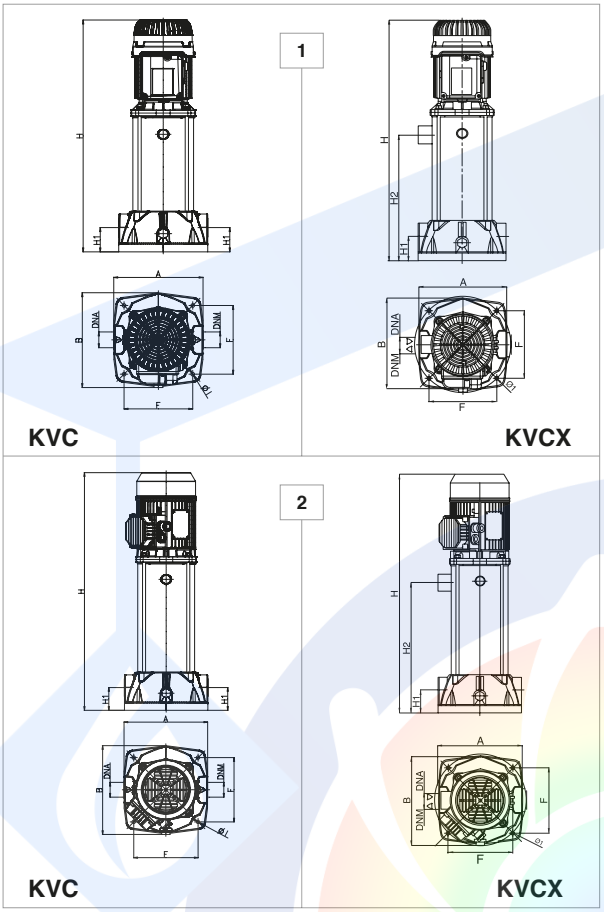

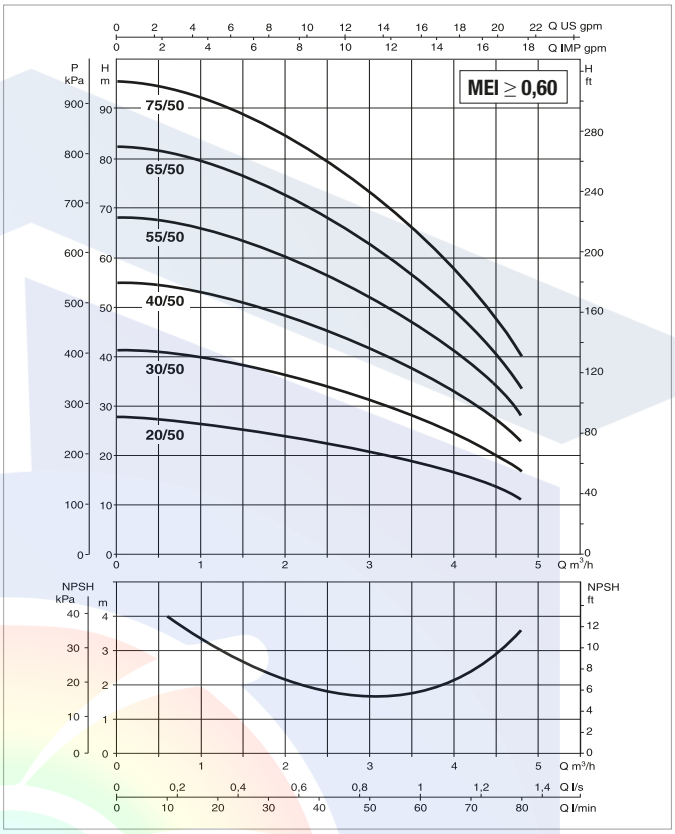

See hydraulic efficiency details on page 291.

The performance curves are based on kinematic viscosity values = 1 mm²/s and density equal to 1000 kg/m³. Curve tolerance according to ISO 9906.

MODEL	ELECTRICAL DATA										
	NO. OF IMPELLERS	POWER INPUT 50 Hz	P1 MAX kW	P2 NOMINAL		In A	MOTOR TYPE	I st. A	1/min.	CAPACITOR	
				kW	HP					µF	Vc
KVC-KVCX 20/50 M	2	1x220-240 V ~	0.55	0.37	0.5	2.5	–	13.7	2800	14	450
KVC-KVCX 20/50 T		3x230-400 V ~	0.54	0.37	0.5	1.7-1.0	–	15.9-9.2	2800	–	–
KVC-KVCX 30/50 M	3	1x220-240 V ~	0.9	0.55	0.75	4	–	13.7	2800	14	450
KVC-KVCX 30/50 T		3x230-400 V ~	0.75	0.55	0.75	2.4-1.4	–	15.9-9.2	2800	–	–
KVC-KVCX 40/50 M	4	1x220-240 V ~	1.2	0.8	1.1	5.6	–	28	2800	20	450
KVC-KVCX 40/50 T		3x230-400 V ~	1.2	0.8	1.1	3.8-2.2	IE2	21.4-12.4	2800	–	–
KVC-KVCX 55/50 M	5	1x220-240 V ~	1.4	1	1.36	6.4	–	30	2800	25	450
KVC-KVCX 55/50 T		3x230-400 V ~	1.4	1	1.36	4.4-2.6	IE2	22.1-12.8	2800	–	–
KVC-KVCX 65/50 M	6	1x220-240 V ~	1.7	1.1	1.5	7.4	–	29.2	2800	31.5	450
KVC-KVCX 65/50 T		3x230-400 V ~	1.7	1.1	1.5	7.4	IE2	21	2800	–	–
KVC-KVCX 75/50 M	7	1x220-240 V ~	2	1.5	2	9	–	38	2800	31.5	450
KVC-KVCX 75/50 T		3x230-400 V ~	1.9	1.5	2	7.7-4.3	IE2	22	2800	–	–

MODEL	EXTERNAL DESIGN	A	B	F	H	H1	H2	Ø I	DNA	DNM	PACKING DIMENSIONS			VOLUME (m³)	WEIGHT kg	
											L/A	L/B	H		single-phase	three-phase
KVC 20/50	1	221	235	170	450	60	–	9	G 1" 1/4	G 1" 1/4	300	360	600	0.065	13.5	13.5
KVC 30/50	1	221	235	170	478	60	–	9	G 1" 1/4	G 1" 1/4	300	360	600	0.065	13.7	13.7
KVC 40/50	1	221	235	170	505	60	–	9	G 1" 1/4	G 1" 1/4	300	360	656	0.071	15.8	15.8
KVC 55/50	1	221	235	170	533	60	–	9	G 1" 1/4	G 1" 1/4	300	360	656	0.071	17.0	17.0
KVC 65/50	2	221	235	170	600	60	–	9	G 1" 1/4	G 1" 1/4	300	360	735	0.079	20.2	19.8
KVC 75/50	2	221	235	170	627	60	–	9	G 1" 1/4	G 1" 1/4	300	360	735	0.079	21.2	20.6
KVCX 20/50	1	221	235	170	450	60	–	9	G 1" 1/4	G 1" 1/4	300	360	600	0.065	13.5	13.5
KVCX 30/50	1	221	235	170	478	60	184	9	G 1" 1/4	G 1" 1/4	300	360	600	0.065	13.7	13.7
KVCX 40/50	1	221	235	170	505	60	184	9	G 1" 1/4	G 1" 1/4	300	360	656	0.071	15.8	15.8
KVCX 55/50	1	221	235	170	533	60	239	9	G 1" 1/4	G 1" 1/4	300	360	656	0.071	17.0	17.0
KVCX 65/50	2	221	235	170	600	60	239	9	G 1" 1/4	G 1" 1/4	300	360	735	0.079	20.2	19.8
KVCX 75/50	2	221	235	170	627	60	332	9	G 1" 1/4	G 1" 1/4	300	360	735	0.079	21.2	20.6

KVC / KVCX 80 - INTEGRAL SHAFT MULTISTAGE VERTICAL CENTRIFUGAL ELECTRIC PUMPS FOR CIVIL AND INDUSTRIAL PRESSURISATION SYSTEMS, PRESSURE UNITS

Pumped liquid temperature range: from 0 °C to +35 °C for domestic use - from 0 °C to +40 °C for the other uses

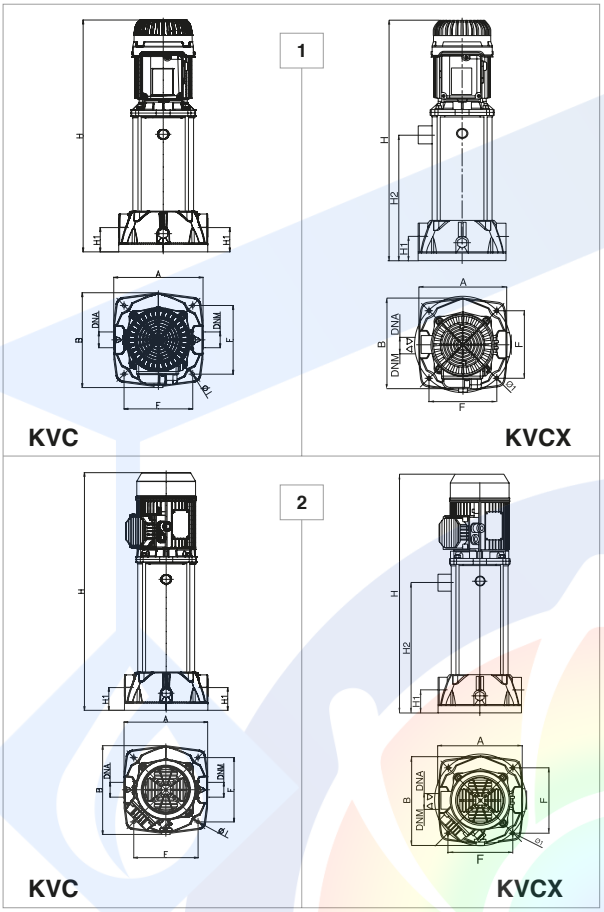

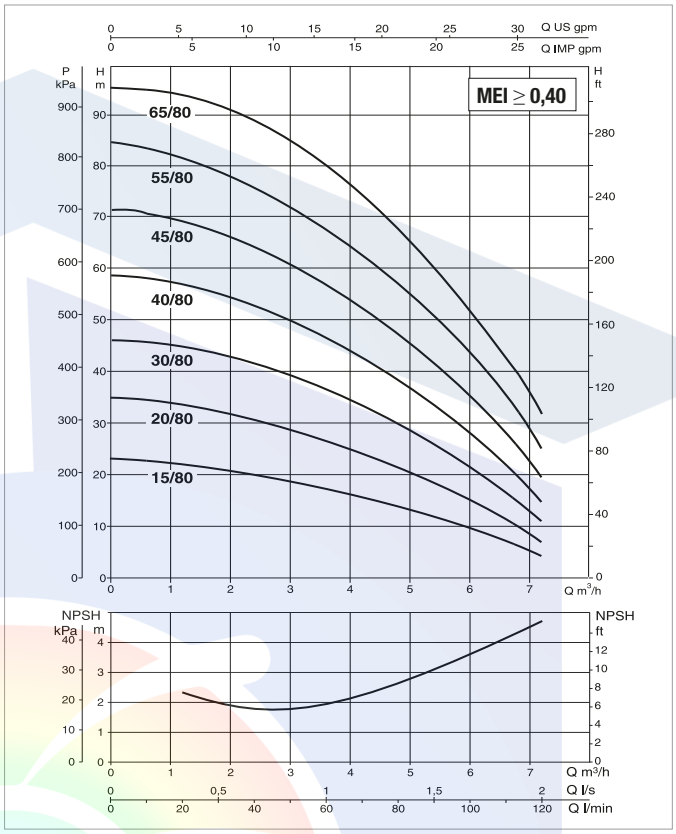

See hydraulic efficiency details on page 291.

The performance curves are based on kinematic viscosity values = 1 mm²/s and density equal to 1000 kg/m³. Curve tolerance according to ISO 9906.

MODEL	ELECTRICAL DATA										
	No. IMPELLERS	POWER INPUT 50 Hz	P1 MAX kW	P2 NOMINAL		In A	MOTOR TYPE	I st. A	1/min.	CAPACITOR	
				kW	HP					µF	Vc
KVC-KVCX 15/80 M	2	1x220-240 V ~	0.55	0.37	0.5	2.5	–	13.7	2800	14	450
KVC-KVCX 15/80 T		3x230-400 V ~	0.54	0.37	0.5	1.7-1.0	–	15.9-9.2	2800	–	–
KVC-KVCX 20/80 M	3	1x220-240 V ~	0.9	0.55	0.75	4.1	–	13.7	2800	14	450
KVC-KVCX 20/80 T		3x230-400 V ~	0.75	0.55	0.75	2.4-1.4	–	15.9-9.2	2800	–	–
KVC-KVCX 30/80 M	4	1x220-240 V ~	1.2	0.8	1.1	5.6	–	28	2800	20	450
KVC-KVCX 30/80 T		3x230-400 V ~	1.2	0.8	1.1	3.8-2.2	IE2	21.4-12.4	2800	–	–
KVC-KVCX 40/80 M	5	1x220-240 V ~	1.4	1	1.36	6.5	–	30	2800	25	450
KVC-KVCX 40/80 T		3x230-400 V ~	1.4	1	1.36	4.4-2.6	IE2	22.1-12.8	2800	–	–
KVC-KVCX 45/80 M	6	1x220-240 V ~	1.7	1.1	1.5	7.4	–	29.2	2800	31.5	450
KVC-KVCX 45/80 T		3x230-400 V ~	1.7	1.1	1.5	5.4-3.1	IE2	31.1-18.0	2800	–	–
KVC-KVCX 55/80 M	7	1x220-240 V ~	2	1.5	2	9	–	38	2800	31.5	450
KVC-KVCX 55/80 T		3x230-400 V ~	1.9	1.5	2	6.2-3.6	IE2	37.5-21.7	2800	–	–
KVC-KVCX 65/80 T	8	3x230-400 V ~	2.2	2.2	3	8-4.6	IE2	32	2800	–	–

MODEL	EXTERNAL DESIGN	A	B	F	H	H1	H2	Ø I	DNA	DNM	PACKING DIMENSIONS			VOLUME (m³)	WEIGHT kg	
											L/A	L/B	H		single-phase	three-phase
KVC 15/80	1	221	235	170	450	60	–	9	G 1" 1/4	G 1" 1/4	300	360	600	0.065	13.5	13.5
KVC 20/80	1	221	235	170	478	60	–	9	G 1" 1/4	G 1" 1/4	300	360	600	0.065	13.7	13.7
KVC 30/80	1	221	235	170	505	60	–	9	G 1" 1/4	G 1" 1/4	300	360	656	0.071	15.7	15.5
KVC 40/80	1	221	235	170	533	60	–	9	G 1" 1/4	G 1" 1/4	300	360	656	0.071	17.0	17.0
KVC 45/80	2	221	235	170	600	60	–	9	G 1" 1/4	G 1" 1/4	300	360	735	0.079	20.1	20.2
KVC 55/80	2	221	235	170	627	60	–	9	G 1" 1/4	G 1" 1/4	300	360	735	0.079	21.2	20.0
KVC 65/80	2	221	235	170	655	60	–	9	G 1" 1/4	G 1" 1/4	300	360	760	0.082	–	21.6
KVCX 15/80	1	221	235	170	450	60	184	9	G 1" 1/4	G 1" 1/4	300	360	600	0.065	13.5	13.5
KVCX 20/80	1	221	235	170	478	60	184	9	G 1" 1/4	G 1" 1/4	300	360	600	0.065	13.7	13.7
KVCX 30/80	1	221	235	170	505	60	239	9	G 1" 1/4	G 1" 1/4	300	360	656	0.071	15.7	15.5
KVCX 40/80	1	221	235	170	533	60	239	9	G 1" 1/4	G 1" 1/4	300	360	656	0.071	17.0	17.0
KVCX 45/80	2	221	235	170	600	60	332	9	G 1" 1/4	G 1" 1/4	300	360	735	0.079	20.1	20.2
KVCX 55/80	2	221	235	170	627	60	332	9	G 1" 1/4	G 1" 1/4	300	360	735	0.079	21.2	20.0
KVCX 65/80	2	221	235	170	655	60	359	9	G 1" 1/4	G 1" 1/4	300	360	760	0.082	–	21.6

KVC / KVCX 120 - INTEGRAL SHAFT MULTISTAGE VERTICAL CENTRIFUGAL ELECTRIC PUMPS FOR CIVIL AND INDUSTRIAL PRESSURISATION SYSTEMS, PRESSURE UNITS

Pumped liquid temperature range: from 0 °C to +35 °C for domestic use - from 0 °C to +40 °C for the other uses

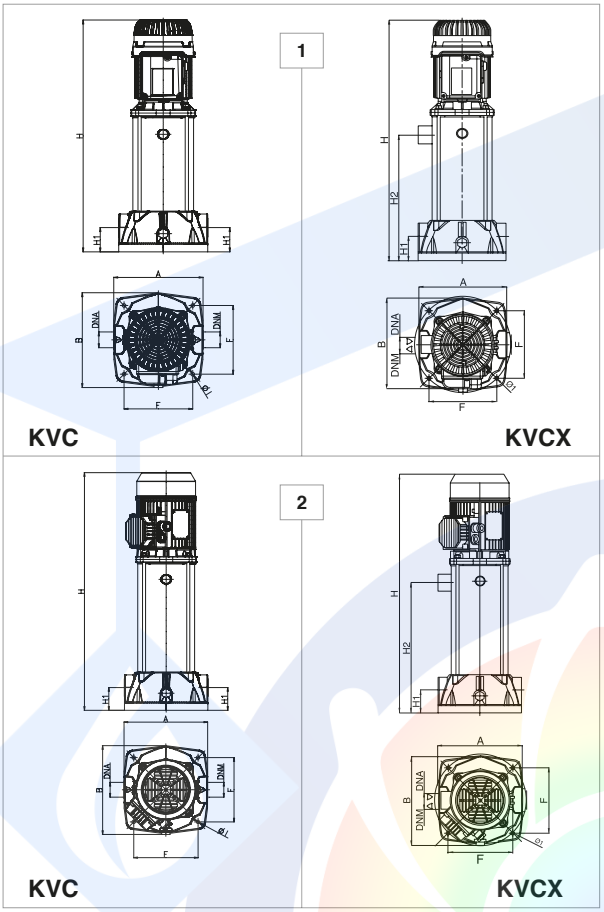

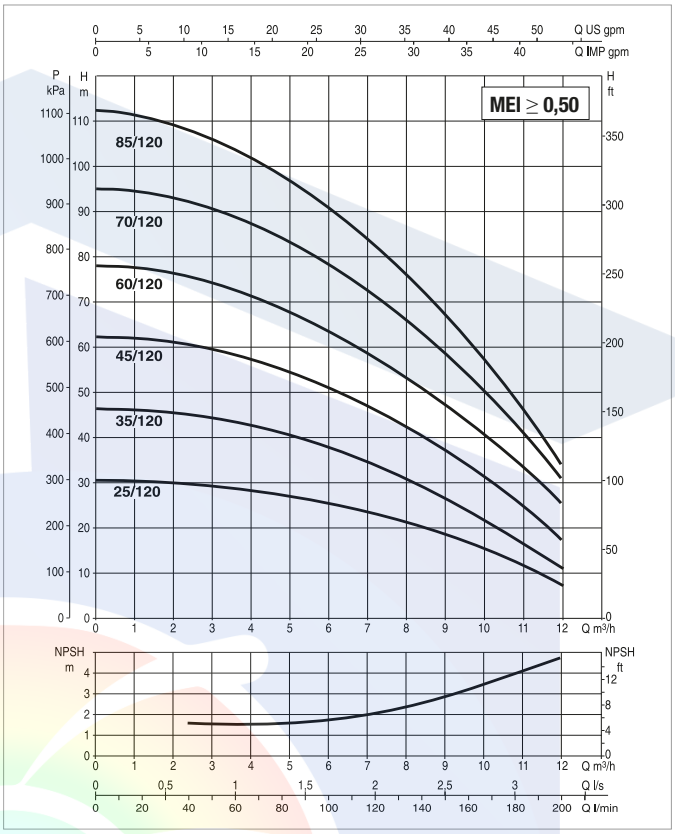

See hydraulic efficiency details on page 291.

The performance curves are based on kinematic viscosity values = 1 mm²/s and density equal to 1000 kg/m³. Curve tolerance according to ISO 9906.

MODEL	ELECTRICAL DATA										
	NO. OF IMPELLERS	POWER INPUT 50 Hz	P1 MAX kW	P2 NOMINAL		In A	MOTOR TYPE	I st. A	1/min.	CAPACITOR	
				kW	HP					µF	Vc
KVC-KVCX 25/120 M	2	1x220-240 V ~	1.5	1	1.36	6.5	–	30	2800	25	450
KVC-KVCX 25/120 T		3x230-400 V ~	1.5	1	1.36	5-2.9	IE2	22.1-12.8	2800	–	–
KVC-KVCX 35/120 M	3	1x220-240 V ~	1.9	1.1	1.5	7.4	–	30	2800	31.5	450
KVC-KVCX 35/120 T		3x230-400 V ~	1.9	1.1	1.5	6-3.5	IE2	31.1-18	2800	–	–
KVC-KVCX 45/120 M	4	1x220-240 V ~	2.6	1.85	2.5	12	–	54	2800	40	450
KVC-KVCX 45/120 T		3x230-400 V ~	2.5	1.85	2.5	7.9-4.6	IE2	48.4-28	2800	–	–
KVC-KVCX 60/120 T	5	3x230-400 V ~	3.1	2.2	3	9.3-5.4	IE2	53-31	2800	–	–
KVC-KVCX 70/120 T	6	3x230-400 V ~	3.8	3	4	11.8-6.8	IE2	78-45	2800	–	–
KVC-KVCX 85/120 T	7	3x230-400 V ~	4.3	3	4	13.5-7.8	IE2	90-53	2800	–	–

MODEL	EXTERNAL DESIGN	A	B	F	H	H1	H2	Ø I	DNA	DNM	PACKING DIMENSIONS			VOLUME (m³)	WEIGHT kg	
											L/A	L/B	H		single-phase	three-phase
KVC 25/120 *	1	221	235	170	450	60	–	9	G 1" 1/4	G 1" 1/4	300	360	585	0.058	17.0	17.1
KVC 35/120 *	2	221	235	170	480	60	–	9	G 1" 1/4	G 1" 1/4	300	360	585	0.061	20.1	20.2
KVC 45/120 *	2	221	235	170	507	60	–	9	G 1" 1/4	G 1" 1/4	300	360	715	0.064	20.2	21.9
KVC 60/120	2	221	235	170	610	60	–	9	G 1" 1/4	G 1" 1/4	300	360	715	0.067	–	21.6
KVC 70/120	2	221	235	170	675	60	–	9	G 1" 1/4	G 1" 1/4	300	360	810	0.074	–	24.0
KVC 85/120	2	221	235	170	702	60	–	9	G 1" 1/4	G 1" 1/4	300	360	810	0.077	–	25.0
KVCX 25/120 *	1	221	235	170	450	60	184	9	G 1" 1/4	G 1" 1/4	300	360	585	0.061	17.0	17.1
KVCX 35/120 *	2	221	235	170	480	60	184	9	G 1" 1/4	G 1" 1/4	300	360	585	0.061	20.1	20.2
KVCX 45/120 *	2	221	235	170	507	60	239	9	G 1" 1/4	G 1" 1/4	300	360	715	0.067	20.2	21.9
KVCX 60/120	2	221	235	170	610	60	239	9	G 1" 1/4	G 1" 1/4	300	360	715	0.065	–	21.6
KVCX 70/120	2	221	235	170	675	60	332	9	G 1" 1/4	G 1" 1/4	300	360	810	0.076	–	24.0
KVCX 85/120	2	221	235	170	702	60	332	9	G 1" 1/4	G 1" 1/4	300	360	810	0.076	–	25.0

* H only valid for the three-phase version

EDUPUMP
WWW.EDUPUMP.IR

اولین و بزرگترین

سایت تخصصی سیستم‌های پمپاژ
با امکان محاسبه آنلاین و انتخاب پمپ

اولین سایت مرجع انتخاب آنلاین پمپ

در حوزه‌های :

ایمنی و آتش‌نشانی
آب و فاضلاب
صنایع غذایی
استخر
صنعت
معدن

تولید بوسترپمپ آتش‌نشانی

درکلاس‌های S1 - S2 - S3
مورد تایید سازمان آتش‌نشانی تهران

تولید بوسترپمپ آبرسانی دور متغیر

بدون محدودیت برند

مشاوره - طراحی - اجراء

تاسیسات مکانیکی (موتورخانه - استخر)
تهویه و تخلیه دود
سیستم‌های پمپاژ
ایمنی معماری
اعلام حریق
اطفاء حریق

آمـــــوزش

تهویه و تخلیه دود
سیستم‌های پمپاژ
ایمنی معماری
اطفاء حریق
اعلام حریق

سرمایش و گرمایش موتورخانه
نرم‌افزار فنی و مهندسی
استخر، سونا و جکوزی
سیستم‌های پمپاژ

تهـــران، سعـدی شمـالـی، خیابان مـرادی نور، پلاک ۳۱
تلفن: ۰۲۱-۷۷۶۸۶۹۶۶ فکس: ۰۲۱-۷۷۶۷۸۶۵۹
EDUPUMP.IR WWW.EDUPUMP.IR